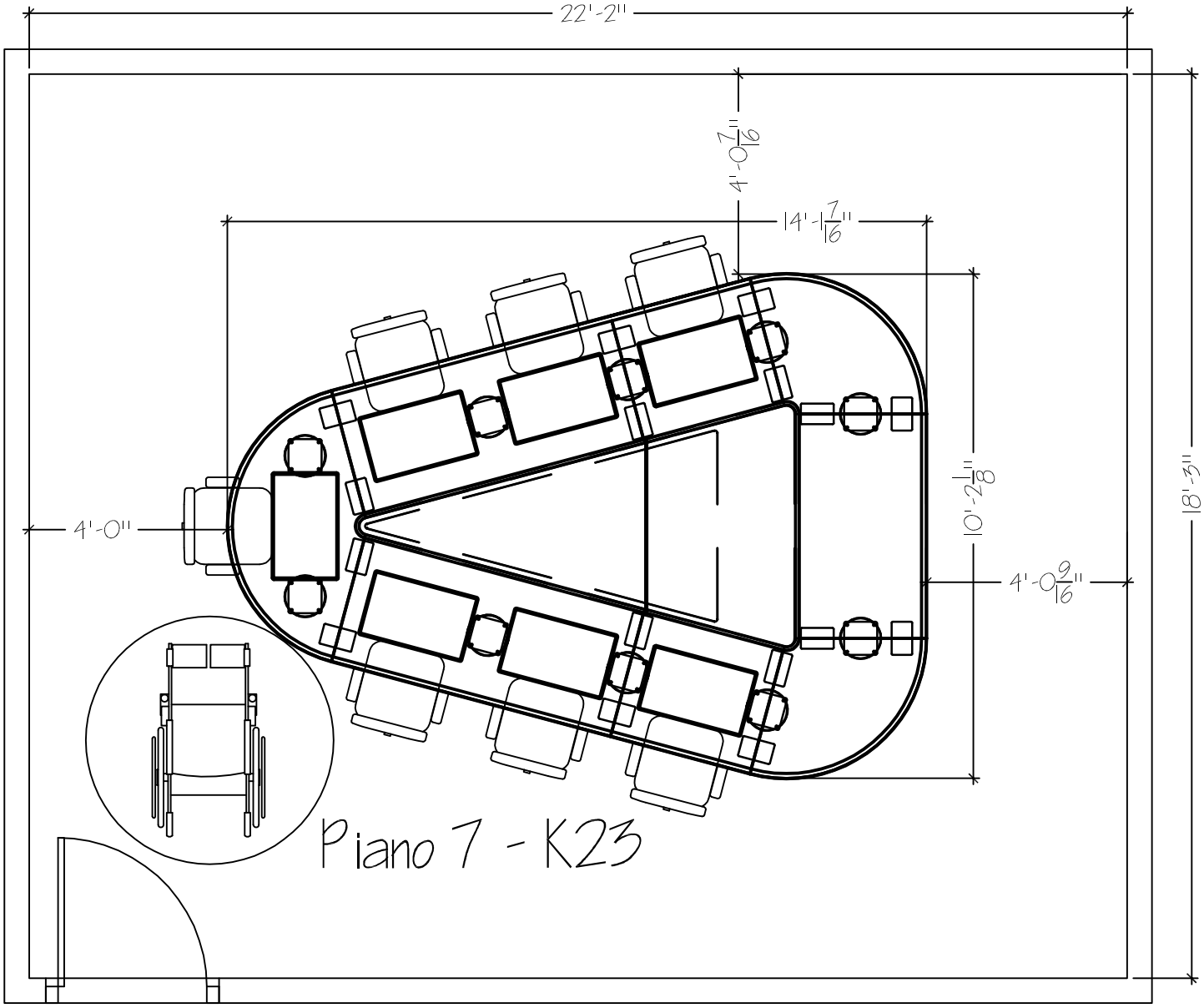

MINIMUM ROOM DIMENSIONS

PIANO TABLE 7-K23
MINIMAL ROOM DIMENSIONS: 18'3"X22'2"
TABLE COUNT: 1

SMARTdesks
514F Progress Drive
Linthicum, MD 21090
800.770.7042
www.smartdesks.com

Property of CBT Supply, Inc. Not to be duplicated.
All Ideas, plans or arrangements indicated in this drawing are copyrighted and owned by CBT Supply, Inc. and shall not be reproduced, used or disclosed to any person or firm or corporation without written permission of CBT Supply, Inc.

SMARTdesks®
DESIGN CENTER